ISSN 0006-3509, Biophysics, 2011, Vol. 56, No. 3, pp. 529–534. © Pleiades Publishing, Inc., 2011.
Original Russian Text © V.A. Ryabov, M.A. Polyakov, N.G. Bibikov, 2011, published in Biofizika, 2011, Vol. 56, No. 3, pp. 566–573.

COMPLEX SYSTEMS BIOPHYSICS

Characterization of Beam Patterns of Bottlenose Dolphin in the Transverse Plane

V. A. Ryabov[a], M. A. Polyakov[a], and N. G. Bibikov[b]

[a] *Karadag Natural Reserve, National Academy of Sciences of Ukraine, Feodosia, Crimea, 334876 Ukraine*
E-mail: ryaboff@ukr.net
[b] *Andreev Acoustical Institute, Moscow, 117036 Russia*

Received November 10, 2010

Abstract—The characteristics of absolute auditory sensitivity of the bottlenose dolphin (*Tursiops truncatus*) in the transverse plane have been measured using short broadband stimuli simulating dolphin clicks (with energy maximum at frequencies 8, 16, 30, 50 and 100 kHz). Experiments were performed using the method of conditioned reflexes with food reinforcement. It is shown that, in the frequency range of 8–30 kHz, the absolute sensitivity of dolphin hearing in any ventral and lateral directions of the transverse plane is only 2–8 dB worse than in the rostral direction. Moreover, it is 25–30 dB better than at 50–100 kHz. At 8–30 kHz, pronounced dorsoventral asymmetry has been observed. In this frequency range, it reaches 15–18 dB whereas at 50–100 kHz this asymmetry decreases to 2–3 dB. In the dorsal direction, the auditory sensitivity is 18 dB worse than in the rostral one at ~8 kHz, and the difference rises smoothly to 33 dB at ~100 kHz. At 50–100 kHz, the acoustical thresholds in the transverse plane relative to those for the with rostral direction get worse almost uniformly in all directions by 25–33 dB. As a result, in the transverse plane the beam patterns are nearly circular, unlike those at 8–30 kHz. The results are discussed in terms of the model of sound perception through the left and right mental foramens. The biological relevance of such asymmetry is emphasized.

Keywords: dolphin, absolute hearing sensitivity, directivity patterns, transverse plane

DOI: 10.1134/S0006350911030249

INTRODUCTION

Aquatic animals must orientate themselves relative to surrounding objects (partners, bottom, surface, underwater rocks, prey, enemies, etc.) in 3D space. Regardless of water transparence and illuminance, they have to find food and mates as well as avoid danger. For these purposes, odontocetes (toothed whales) have an efficient sonar, comprising a system for emitting the sounding pulses and a system for receiving the echo signals. Both systems possess unique characteristics that have been evolving over millions of years, and are marked by pronounced directionality.

In view of the unusual positioning of the animal in our experiments (Fig. 1), we further use spatial coordinates relating to the object proper, without tying it to external points of reference. The plane perpendicular to the longitudinal (rostral–caudal) axis of the animal body will be called transverse. The plane including the longitudinal axis and dividing the body into the left and the right parts will be called median. Finally, the plane including the longitudinal axis and dividing the body into the dorsal and the ventral parts will be called frontal. Note that in most works [1–4] the spatial coordinates were associated with external points of reference, where the dolphin's frontal plane was referred to as horizontal, and the dolphin's median plane as vertical.

In dolphins, sound passes to the middle ear via the left and the right mental foramens and mandibular canals. In each half of the lower jaw, this set performs the function of a «new external ear» (further, «ear») and from the acoustical standpoint represents a traveling wave antenna (TWA) [6–10]. The directivity pattern (DP) of each ear is formed by TWA, and together they determine the complex pattern of dolphin's spatial hearing.

In behavioral experiments, the frontal-plane hearing DP in bottlenose dolphin was first obtained in 1975 [11] at a singe frequency of 80 kHz using a binaural unmasking technique. Subsequently the frontal-plane DP was studied in several dolphin species using both behavioral [3, 4, 12] and electrophysiological [1, 13–16] approaches; in all cases the results proved qualitatively similar. The highest sensitivity was commonly found for the rostral direction, coinciding with the longitudinal axis of the body. The threshold width of the DP could vary, but for short (0.5 ms) tones at 128 kHz it was ~10° in bottlenose dolphin and somewhat larger than 10° in white whale [16].

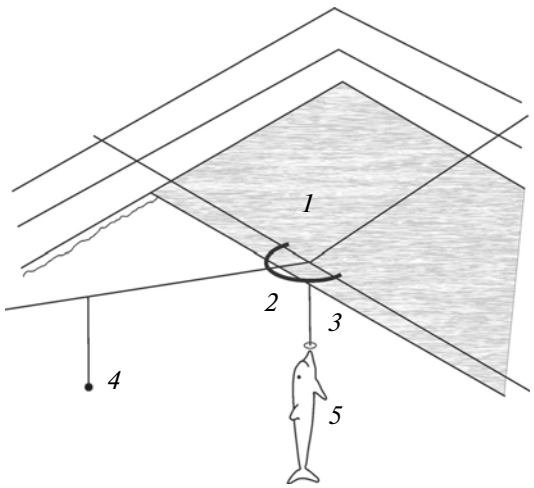

Fig. 1. Testing stage: *1* – footbridge; *2* – rigging and alidade for positioning the emitter along an arc of 3-m radius at the required angle; *3* – start disk; *4* – emitter; *5* – dolphin in vertical position.

There is a single work where the dolphin's hearing DP was assessed in the rostral/median half-plane [4], using binaural unmasking. On the whole, these results suggest that the median- and frontal-plane DPs are close in bottlenose dolphin. The best directivity was noted for high frequencies, declining substantially at lower ones.

Heretofore, the transverse-plane DP of dolphin's hearing has not been measured experimentally. At the same time, the results of modeling [5, 6] allow a suggestion that the DPs for the left and the right ears must partly overlap rostrally and ventrally but somewhat diverge dorsally and caudally, forming a composite pattern of spatial hearing. At that, the transverse-plane DPs of the ears also partly overlap, which may determine a number of interesting features. The calculated DP overlap width in the frontal plane was 21°, 16°, and 14.4°, while in the median plane it was 11°, 8°, and 7.2° at 60, 110, and 130 kHz respectively. These estimates obtained in a TWA model are in qualitative agreement with the width of DPs reported in [4].

The aim of the present study was to experimentally measure the DP of dolphin's absolute auditory sensitivity in the transverse plane using short broadband pulses similar to its echolocation clicks (spectral maxima at 2, 4, 8, 16, 30, 50, and 100 kHz), and to correlate these data with the absolute auditory sensitivity of the same dolphin in the rostral direction.

EXPERIMENTAL

Tests were performed at the premises of Karadag Natural Reserve in an indoor concrete pool measuring 27.5 × 9.5 × 4.5 m, with an adult female Black Sea bottlenose dolphin (*Tursiops truncatus*). The animal had been kept for more than 20 years, had normal hearing and was trained for behavioral responses.

We used the method of conditioned reflexes with food reinforcement, in the go/no-go version [17]. The coach standing on the footbridge (Fig. 1, *1*) submerged the start disk (*3*) to 1 m and signaled the dolphin to come to the start. The dolphin swam to the disk and assumed a strictly vertical position, touching the disk with its rostrum and waiting for acoustic stimulus. Then the researcher switched on the stimulus, which the dolphin detected (or did not). Detecting a stimulus, the dolphin left the start (go) and moved toward the emitter. If no stimulus was presented, the dolphin remained in the start position (no go) until signaled by the coach. In these cases the dolphin got food reinforcement. If the dolphin did not leave the start after a stimulus (miss) or left it without a stimulus (false response), it got no reward and usually the presentation of the next stimulus was delayed.

During measurement of auditory thresholds in the dorsal directions of the transverse half-plane, the start position of the dolphin (*5*) was the one shown in Fig. 1, so that the edge of the footbridge was at the ventral side. During measurement of auditory thresholds in the ventral directions, the dolphin turned through 180° about the longitudinal body axis so that the edge of the footbridge was at the dorsal side. Under coach control, the dolphin readily assumed the required position and kept it precisely, in both cases seeing the edge of the footbridge; fluctuations about the longitudinal axis rarely exceeded 5°.

In measuring the detection thresholds for stimuli from the rostral direction, the dolphin was in the horizontal position parallel to the edge of the footbridge, rostrum touching the start disk at a depth of 1 m. The emitter was directly in front of the dolphin at the same depth.

In all experiments the distance from the start disk to the emitter was 3 m. In every trial the decision to present or not present the stimulus was taken at random (but not more than three running). The stimulus intensity was changed stepwise. The session began with a level surely exceeding the supposed threshold. Upon successful performance, the stimulus was attenuated by 6 dB. After the first mistake the step was reduced to 3 dB. Each threshold was calculated from ~15 trials as the mean value of the inflection point. To diminish the interference of direct and reflected sound in the pool, we used short broadband acoustic pulses similar to dolphin's echolocation clicks.

Note that in the vertical position (Fig. 1), from the rostral direction of highest auditory sensitivity the dolphin receives only multiply reflected (from bottom and surface) and substantially weakened signals. With the given disposition of the emitter and dolphin's head, direct reflections from the surface also came at a significant angle to the longitudinal axis, not falling into the highest auditory sensitivity zone. To minimize the acoustic field distortion at the start, the disk was 50 mm in diameter and 4 mm thick, made of Plexiglas

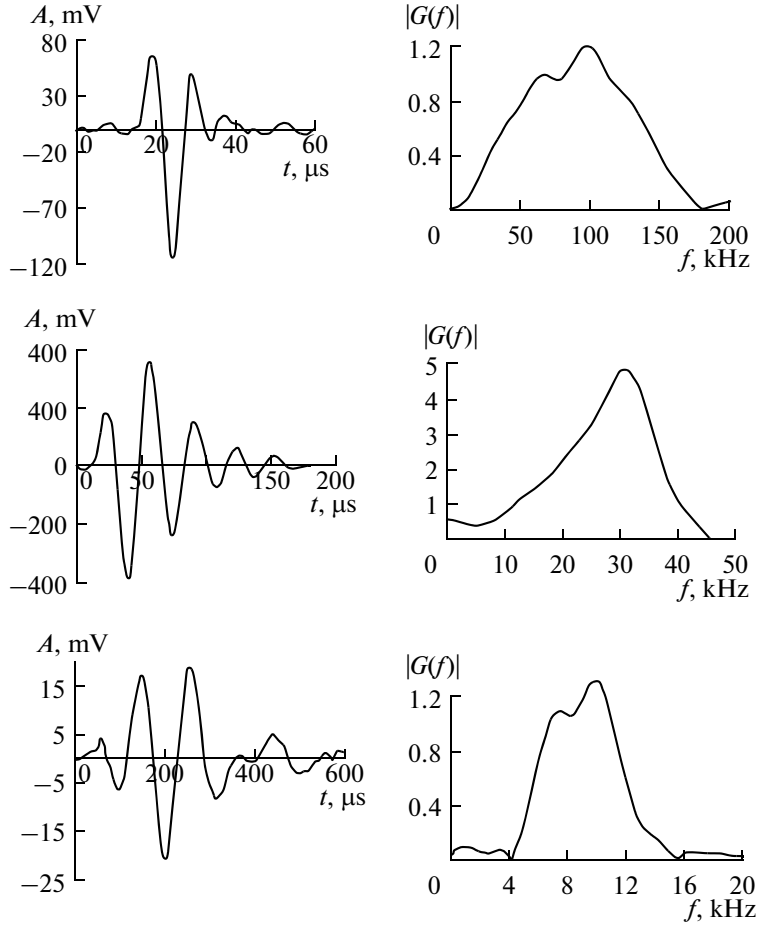

Fig. 2. The time profiles $A(t)$ and spectra $|G(f)|$ of acoustic stimuli with peak energy about 100, 30, and 8 kHz (from top to bottom). Recording for emitter and receiver 1 m deep and spaced 1 m; transducer excitation with a 20-V rectangular pulse; receiver, hydrophone 8103 with amplifier 2650 (100 ×) from B&K.

and mounted on a bamboo stick (~6 mm thick at the disk and up to 10 mm at the surface).

Stimuli peaking at 30, 50, and 100 kHz were produced with spherical piezoceramic transducers 50, 30, and 20 mm in diameter excited with rectangular pulses of 17, 10, and 5 μs duration, respectively. Stimuli at 2, 4, 8, and 16 kHz were made with the 50-mm transducer excited through a band-pass filter of central frequency 2, 4, 8 or 16 kHz with a rectangular pulse of 225, 125, 56, and 36 μs respectively. The effective length of the stimuli in no case exceeded three periods of the peak-energy wave (Fig. 2). Thereby the reflections from pool walls and water surface did not interfere with the stimulus, being delayed and attenuated. At threshold stimulation levels, the reflections were below the detection limit, so measurements could be made without special acoustic backing. The sound pressure level and the stimulus shape were monitored with a calibrated hydrophone 8103 and precision amplifier 2650 from B&K and recorded using an ADC (USB3000) in the 1–200 kHz range.

RESULTS

The mean auditory thresholds for different angles of disposition of the emitter relative to the dolphin's lower jaw—the DPs—in the transverse plane for stimuli with peak energy at 8, 16, 30, 50, and 100 kHz are displayed in Fig. 3. In each panel, the zero level is the mean threshold of the same dolphin for the same stimulus presented rostrally at the same distance. Thus, the plots show the relative drop in the absolute auditory sensitivity as a function of the angle of presentation.

It should be noted that the thresholds for the rostrally presented stimuli have no pronounced minimum in the frequency range tested: from 8 to 100 kHz they smoothly decrease by ~6 dB (from 0.0075 to 0.0037 Pa), while at 4 and 2 kHz the threshold abruptly rises to 0.2 and 0.8 Pa (34 and 47 dB) respectively. On the whole, the absolute rostral thresholds measured by us correspond to normal dolphin hearing, with allowance for energy summation [17, 18].

The most intriguing result is that the auditory sensitivity of the dolphin at 8–30 kHz in the ventral and lateral directions of the transverse plane is only 2–8 dB

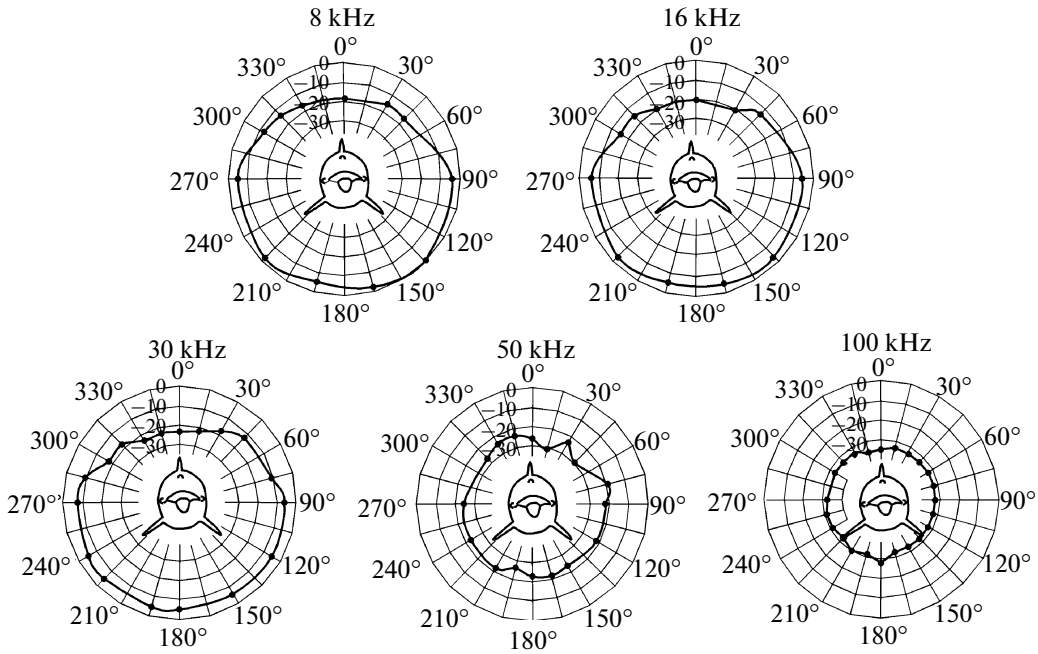

Fig. 3. Transverse-plane DP of dolphin's hearing for stimuli peaking about 8, 16, 30, 50, and 100 kHz. At each frequency the zero level is the mean threshold for the same dolphin in the rostral direction: 0.0075, 0.0066, 0.0063, 0.0042, and 0.0037 Pa respectively; the vertical axis denotes deterioration of auditory sensitivity, dB.

worse than in the rostral direction, and it is some 25–30 dB better than at 50–100 kHz (Figs. 3, 4), the frequencies conventionally associated with echolocation. Further, at 8–30 kHz the DPs show pronounced dorsoventral asymmetry, reaching 15–18 dB, which reduces to just 2–3 dB at 50–100 kHz. In the dorsal direction relative to rostral, the hearing sensitivity is 18 dB worse for stimuli around 8 kHz, and the difference increases with frequency (to 33 dB at ~100 kHz). At that, the thresholds at 50–100 kHz deteriorate almost uniformly in all transverse-plane directions (25–33 dB relative to rostral). As a result, the transverse-plane DPs at 50–100 kHz substantially contract (Fig. 3) and are nearly round, in contrast to DPs at 8–30 kHz. It should be specially noted that the DP shape does not significantly change with a nearly fourfold raise of frequency from 8 to 30 kHz (Figs. 3, 4), but is abruptly altered when further the frequency is less than doubled from 30 to 50 kHz.

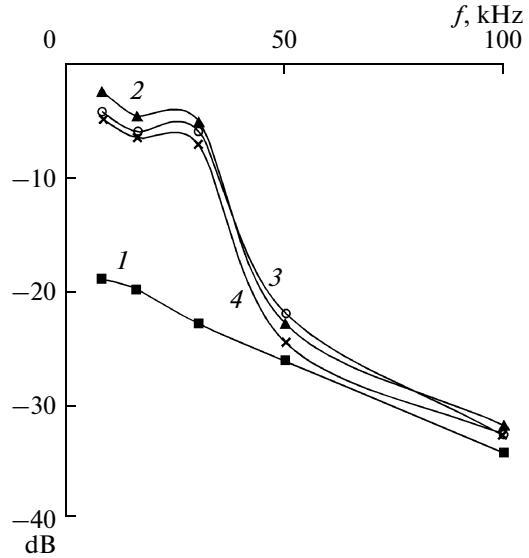

Fig. 4. The frequency dependences of dolphin's auditory sensitivity for principal directions in the transverse plane: *1* – dorsal; *2* – ventral; *3* – left; *4* – right.

Admittedly, here we must rely on results obtained for one animal. However, considering the small angular step (15–30°), which increased the pattern reliability, and the high degree of dolphin training, which ensured the small scatter of data, we believe these results to be typical of other healthy adult bottlenose dolphins.

DISCUSSION

It is known that in the rostral direction, the auditory thresholds of bottlenose dolphin are minimal (40–50 dB relative to 1 μPa) in a broad frequency range 8–130 kHz [4, 15, 16, 18, 20] but steeply rise below 8 kHz and above 130 kHz. The directivity of hearing in the frontal and median planes, being well pronounced above 50 kHz, is almost absent in the low-frequency range [4, 16].

The results presented here show the dependence of the absolute auditory sensitivity of the dolphin on the

stimulus direction and frequency is quite pronounced in the transverse plane. At 8–30 kHz, the sensitivity in the ventral and lateral directions does not differ much from that in the rostral direction (Figs. 3, 4). At the same time, in the dorsal direction the hearing sensitivity is almost an order of magnitude worse than in the rostral direction, so the dorsoventral asymmetry reaches 15–18 dB.

Considering the causes of the revealed asymmetry, we should point out that the observed DP must result from the directionality of the left and right ears. In particular, this is evidenced by the literature data obtained in studying the DPs of head structures in a dolphin right after death [21]. With a hydrophone implanted into the fat channel before the left bulla, the monaural receptivity was maximal at ipsilateral angles ~20°. Similar asymmetrical monaural reception was observed in an acute electrophysiological experiment when local potentials were picked from the inferior colliculus of a *Stenella* dolphin [13]. Upon body-surface recording of the presumed auditory nerve responses of river dolphin (*Inia geoffrensis*), monaural DPs for short pulses peaking at 30–50 kHz [14] exhibited best receptivity at 10–15° ipsilateral. In bottlenose dolphin [15] the direction of maximal sensitivity monotonically shifted from 0 to 22.5° ipsilaterally with frequency decreasing from 128 to 8 kHz. The monaural characteristics are asymmetric, with the contralateral slope being steeper. These data are in good mutual agreement, and also suggest partial overlap of DPs and broadening of the directivity diagram of dolphin's hearing at low frequencies.

It is quite natural to assume that the asymmetry of monaural DPs registered in the frontal plane also exists in the transverse plane. Here it must be determined by that the DP of either ear is formed because of acoustic shielding of the mental foramens by the upper and lower jaw bones and sound diffraction on these structures [5, 6]. As a result, the DPs in the ventral direction are partly overlapping at high auditory sensitivity, while in the dorsal direction, at minimal sensitivity. In view of the horizontal position of the dolphin swimming near the surface this means that in the direction toward the bottom the hearing is better than toward the water surface; this is fully consistent with our measurements.

If the results obtained here at 8–30 kHz (Fig. 3) are presented at a larger scale, the minimal receptivity in the dorsal region becomes more obvious, and the DP is nearly heart-shaped, as exemplified in Fig. 5 for 16 kHz. Considering the length of the sound wave at 8–30 kHz, the observed minimum can be explained by partial overlap of the DPs of the two ears. This is consistent with the earlier model [5, 6] and is indicated in Fig. 5 with lines tentatively drawn for the left (L) and the right (R) ears.

Thus, our results corroborate the idea of non-coincident monaural DPs in the lower frequency range.

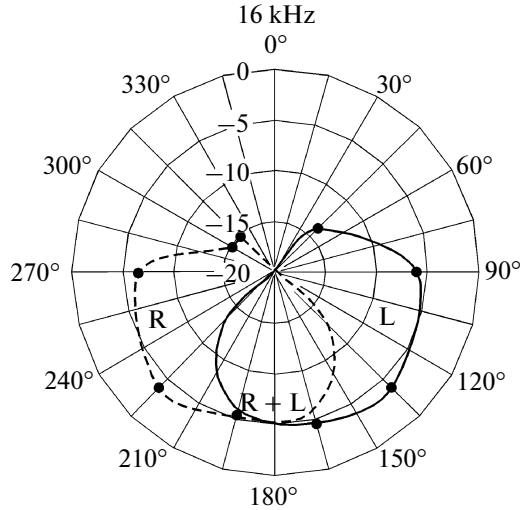

Fig. 5. The DP of dolphin's hearing in the transverse plane for 16 kHz stimuli (the 0 to −20 dB part of that in Fig. 3) is viewed as superposition of the DPs of the left (L) and right (R) ears. The putative overlap region (R+L) is obtained in accordance with the model implying sound perception via the left and right mental foramens operating as TWA [5–10].

Such a resultant DP ensures one-pulse target (or sound source) direction finding by means of comparison and, just as in the frontal plane, forms the features required for sound location in the transverse plane.

In contrast, the mean transverse-plane thresholds at 50 and 100 kHz deteriorate relative to the rostral ones almost uniformly in all directions (25 and 33 dB respectively) and the dorsoventral asymmetry is only 2–3 dB (Fig. 4).

It appears that at frequencies above ~40 kHz some mechanism is engaged whereby the DP of each ear contracts and they come to almost fully overlap, which abolishes the dorsoventral asymmetry of dolphin's hearing in the transverse plane. Such an event is consistent with the abrupt change in the DP shape between 30 and 50 kHz (Figs. 3, 4). This is also in line with the data [15] for the rostrofrontal half-plane.

The sharp dorsoventral asymmetry of the auditory sensitivity in bottlenose dolphin (Figs. 3–5) is in accord with the data of measurements in the median plane at 30 kHz [4]. For directions close to dorsal and ventral, the difference was about 15 dB. The smaller difference in thresholds derived from smoothed and extrapolated data was not substantiated. The difference obtained by us for the rostral and lateral directions (Figs. 3, 4) also agrees with the data of the cited work (8–10 dB at 30 kHz). Further, it is consistent with the electrophysiological data [15, 16], where the relative drop in sensitivity in the lateral direction increased with the frequency of a tone signal; 3, 20, and 30 dB at 8, 30, and 128 kHz respectively. This feature gave rise to quite an unexpected form of audiograms for laterally positioned emitters: the hearing

thresholds monotonously rose as the sound frequency was raised from 8 to 128 kHz [16]. According to our data, the same tendency holds throughout the transverse plane (Figs. 3, 4).

Consequently, in the 8–30 kHz range the dolphin has a broad maximum of auditory sensitivity in the rostral, ventral, and lateral directions. In the dorsal and caudal directions, the hearing is substantially worse [3, 5, 6], which determines the rostral–caudal and the dorsoventral asymmetry. Attenuated dorsal receptivity may serve to protect dolphin's hearing from surface reverberation of its own powerful echolocation pulses. At the same time, dorsoventral and rostral–caudal asymmetries create features necessary for sound location. Thus, the rostroventral partial overlap of the DPs of the left and right ears forms a complex spatial DP of dolphin's hearing [5, 6], which together with the binaural features creates the rostral/caudal, dorsal/ventral, and left/right characters. In other words, the directivity of the «new external ear» ensures the features necessary for binaural 3D sound location [10], like the pinna of land mammals with passive hearing [22].

The biological significance of the results obtained appears obvious in explaining the intraspecies acoustic communication of Black Sea bottlenose dolphins as well as perception and location of all sounds in the range up to 30–40 kHz. A broad DP with preference for rostral, ventral and lateral directions [5, 6] is optimal for handling such signals.

ACKNOWLEDGMENTS

The authors heartily thank dolphin coaches Svetlana Yakhno and Nadezhda Zhukova, without whose expertise the experiments would have been impossible.

The work was supported by the Ukrainian and Russian Foundations for Basic Research (joint project F28.4/024 and 09-04-00660).

REFERENCES

1. V. V. Popov and A. Ya. Supin, Dokl. AN SSSR **300**, 756 (1988).
2. D. L. Renaud and A. N. Popper, J. Exp. Biol. **63**, 569 (1975).
3. R. A. Kastelein, M. Janssen, W. C. Verboom, and D. de Haan, J. Acoust. Soc. Am. **118**, 1172 (2005).
4. W. W. L. Au and P. W. B. Moor, J. Acoust. Soc. Am. **75**, 255 (1984).
5. V. A. Ryabov, Study of dolphin's lower jaw morphology and modeling of the directivity pattern of echolocation hearing. http://edok01.tib.unihannover.de/edoks/e01mr01/ 367007592.pdf
6. V. A. Ryabov, in *Marine Mammals of the Holarctic*, Ed. by V. M. Belkovich (KMK Scientific Press, Moscow, 2004), pp. 483–489.
7. V. A. Ryabov, Proc. Inst. Acoustics **29** (3), 283 (2007).
8. V. A. Ryabov, Biofizika **53**, 504 (2008).
9. V. A. Ryabov, in *Marine Mammals of the Holarctic*, Ed. by A. N. Boltunov (Astroprint Publishing House, Odessa, 2008), pp. 468–473.
10. V. A. Ryabov, Natural Science **2**, 646 (2010).
11. K. A. Zaitseva, A. I. Akopyan, and V. P. Morozov, Biofizika **20**, 519 (1975).
12. K. S. Norris and G. W. Harvey, J. Acoust. Soc. Am. **56**, 659 (1974).
13. T. H. Bullock, A. D. Grinnell, E. Ikezono, et al., Z. Vergl. Physiol. **59**, 117 (1968).
14. V. V. Popov and A. Ya. Supin, in *Marine Mammal Sensory Systems*, Ed. by J. Thomas et al., (Plenum, New York, 1992), pp. 257–267.
15. V. V. Popov, A. Ya. Supin, V. O. Klishin, and T. N. Bulgakova, J. Acoust. Soc. Am. **119**, 636 (2006).
16. V. V. Popov and A. Ya. Supin, J. Acoust. Soc. Am. **126**, 1581 (2009).
17. R. J. Schusterman, in *Animal Sonar Systems*, Ed. by R.-G. Busnel and J. F. Fish (Plenum, New York, 1980), p. 11.
18. C. S. Johnson, in *Marine Bio-Acoustics II*, Ed. by W. N. Tavolga (Pergamon, Oxford, 1967), pp. 247–260.
19. C. S. Johnson, J. Acoust. Soc. Am. **43** 75 (1968).
20. W. W. L. Au, D. W. Lemonds, S. Vlachos, et al., J. Comp. Psychology **116** (2), 151 (2002)
21. K. S. Norris and G. W. Harvey, J. Acoust. Soc. Am. **56**, 659 (1974).
22. T. J. Imig, N. G. Bibikov, P. Pourrier, and F. K. Samson, J. Neurophysiol. **83**, 907 (2000).